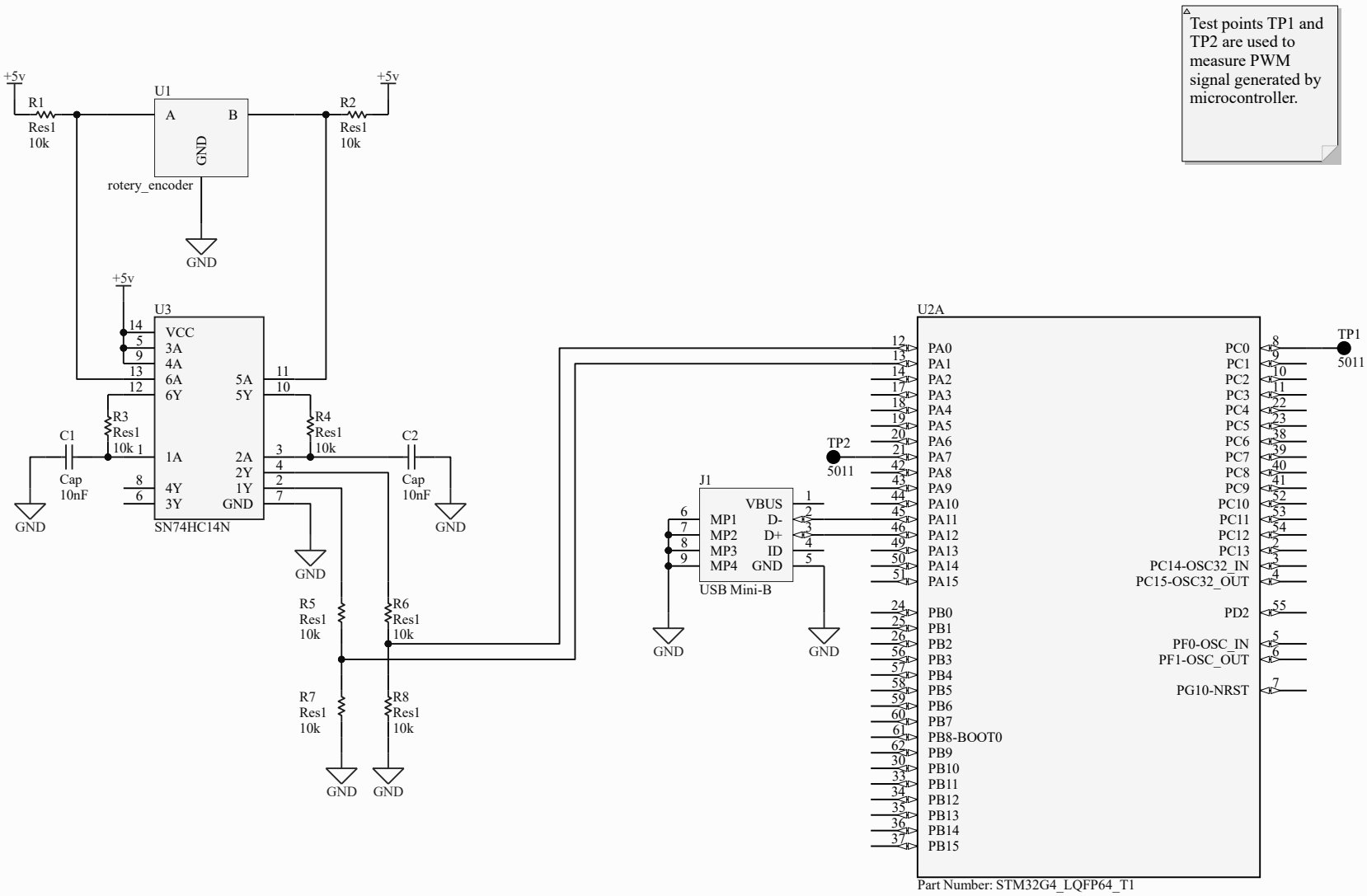

Title *Test Circuit*			*Alec Matthews* *1315 Sunset Rd.* *Hood River, OR 97031-7716* *United States* *
Size: Letter	Number:01	Revision:02	
Date: 5/28/2020	Time: 3:29:25 PM	Sheet 1 of 1	
File: C:\PCB\Final Project Test Circuit\test_circuit.SchDoc			