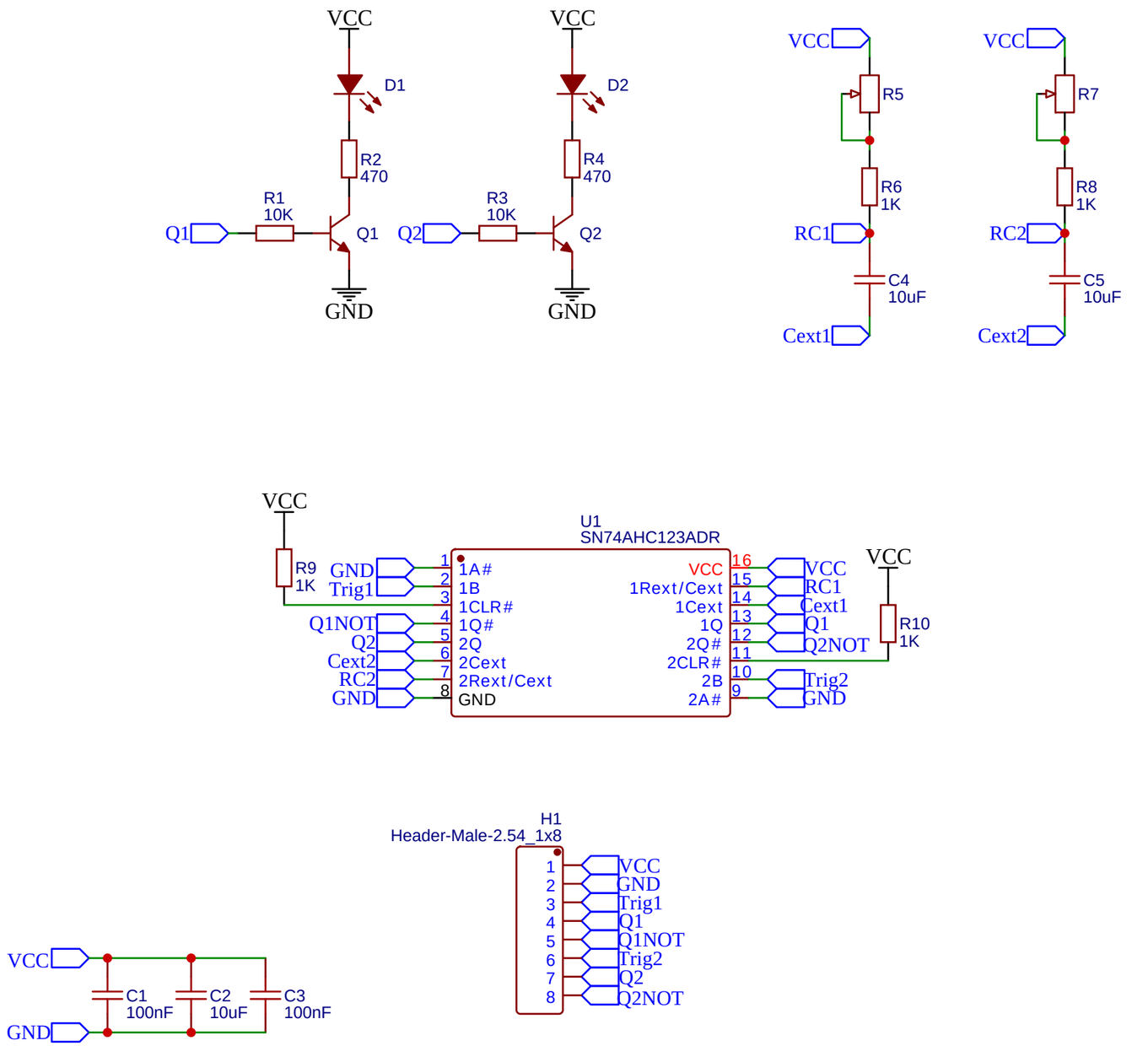

TITLE: Sheet_1	REV: 1.0
Company:	Sheet: 1/1
Date: 2021-04-16 Drawn By: Schafmag	