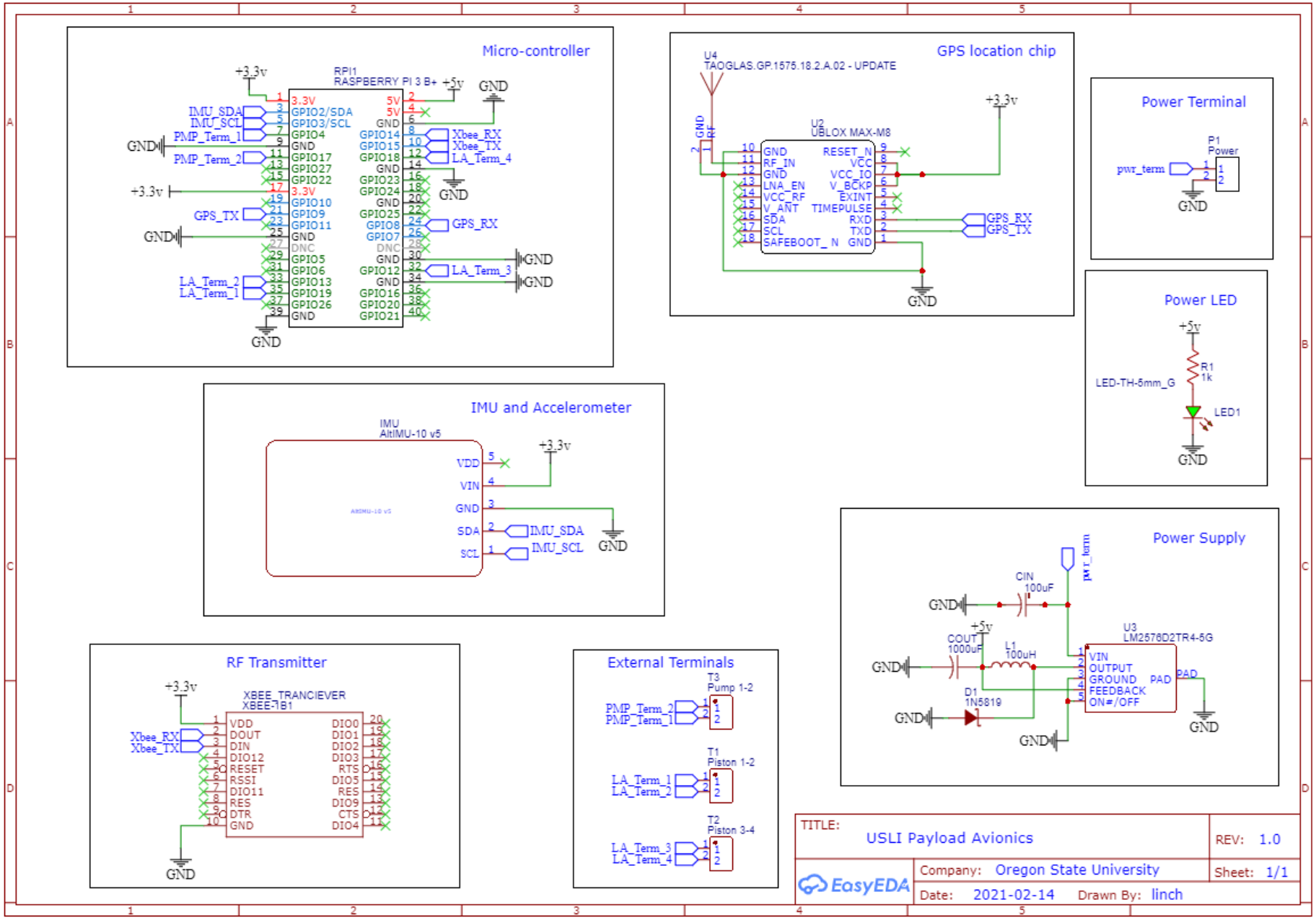
Micro-controller
RPI1
RASPBERRY PI 3 B+
+3.3v
+5v
GND
IMU_SDA
IMU_SCL
PMP_Term_1
PMP_Term_2
GPS_TX
LA_Term_2
LA_Term_1
Xbee_RX
Xbee_TX
LA_Term_4
GPS_RX
LA_Term_3
GPS location chip
U4
TAOGLAS.GP.1575.18.2.A.02 - UPDATE
U2
UBLOX MAX-M8
RESET_N
VCC
VCC_IO
V_BCKP
EXINT
TIMEPULSE
RXD
TXD
RF_IN
LNA_EN
VCC_RF
V_ANT
SDA
SCL
SAFEBOOT_ N
Power Terminal
P1
Power
pwr_term
Power LED
R1
1k
LED-TH-5mm_G
LED1
IMU and Accelerometer
IMU
AltIMU-10 v5
VDD
VIN
GND
SDA
SCL
IMU_SDA
IMU_SCL
Power Supply
CIN
100uF
COUT
1000uF
L1
100uH
D1
1N5819
U3
LM2576D2TR4-5G
VIN
OUTPUT
GROUND
FEEDBACK
ON#/OFF
PAD
RF Transmitter
XBEE_TRANCIEVER
XBEE-TB1
VDD
DOUT
DIN
DIO12
RESET
RSSI
DIO11
RES
DTR
GND
DIO0
DIO1
DIO2
DIO3
RTS
DIO5
RES
DIO9
CTS
DIO4
External Terminals
T3
Pump 1-2
PMP_Term_2
PMP_Term_1
T1
Piston 1-2
LA_Term_1
LA_Term_2
T2
Piston 3-4
LA_Term_3
LA_Term_4
TITLE:
USLI Payload Avionics
REV: 1.0
Company: Oregon State University
Sheet: 1/1
Date: 2021-02-14
Drawn By: linch
EasyEDA