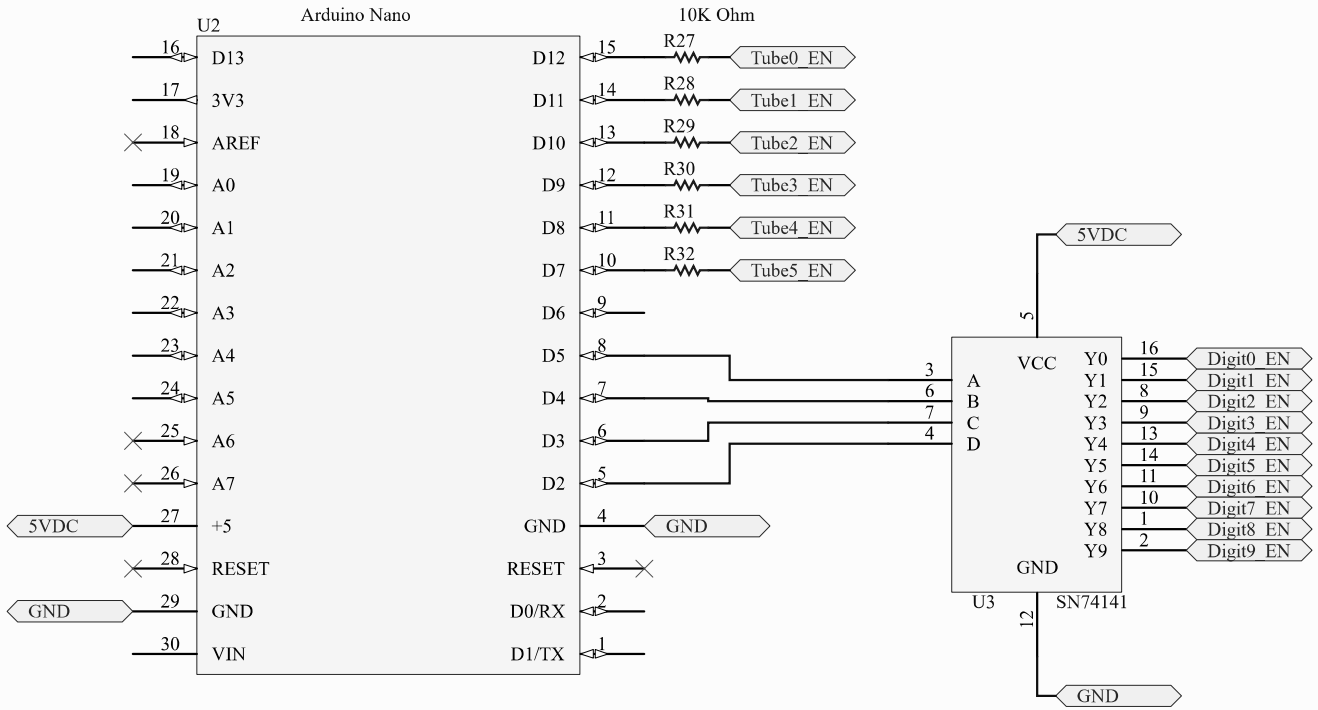

Title		
Size A	Number	Revision
Date: 5/28/2020		Sheet of
File: Microcontroller.SchDoc		Drawn By:

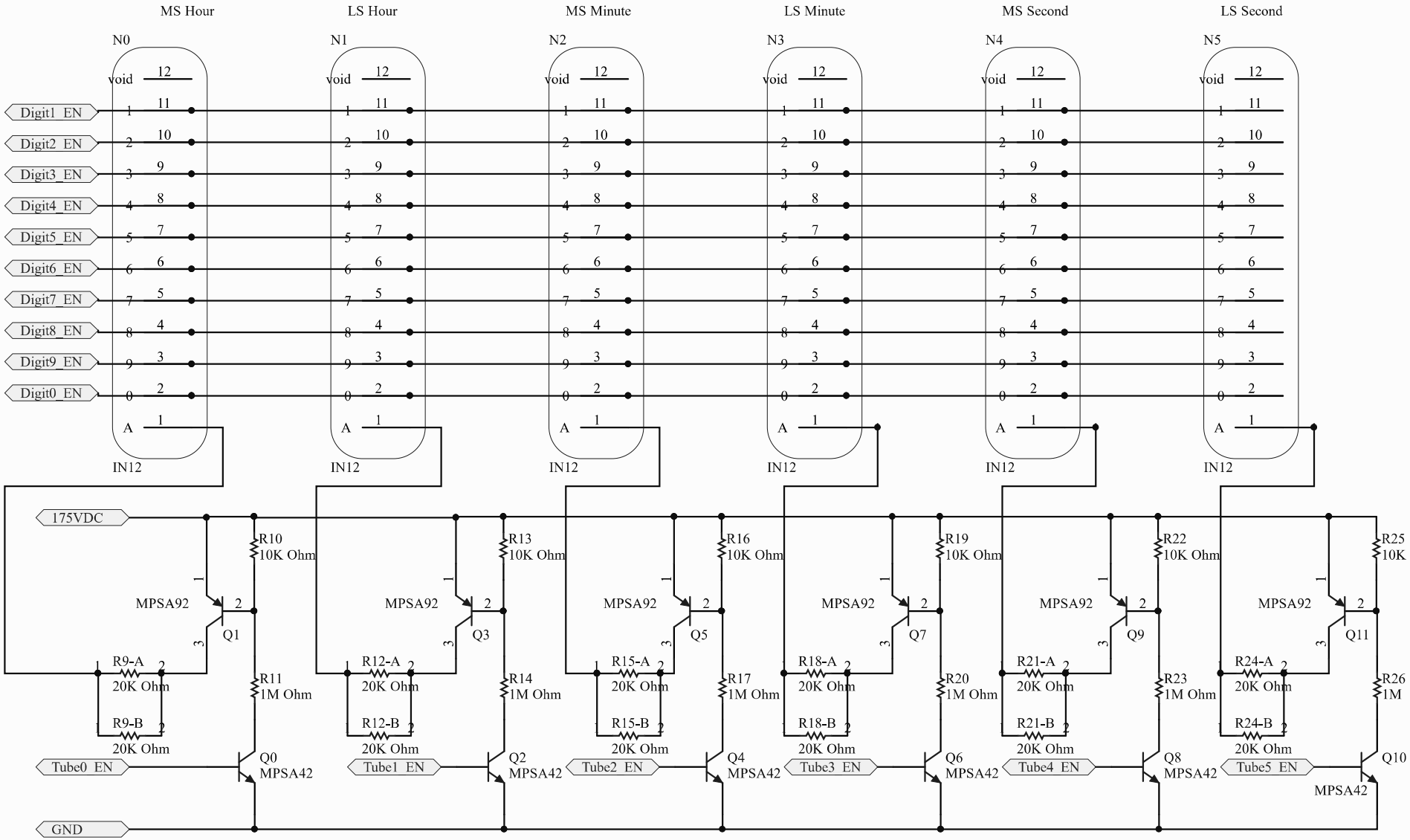

https://www.instructables.com/id/Arduino-4-Tube-Multiplexed-Nixie-Clock/

Title		
Size A	Number	Revision
Date: 5/28/2020		Sheet of
File: NixieTubes.SchDoc		Drawn By:

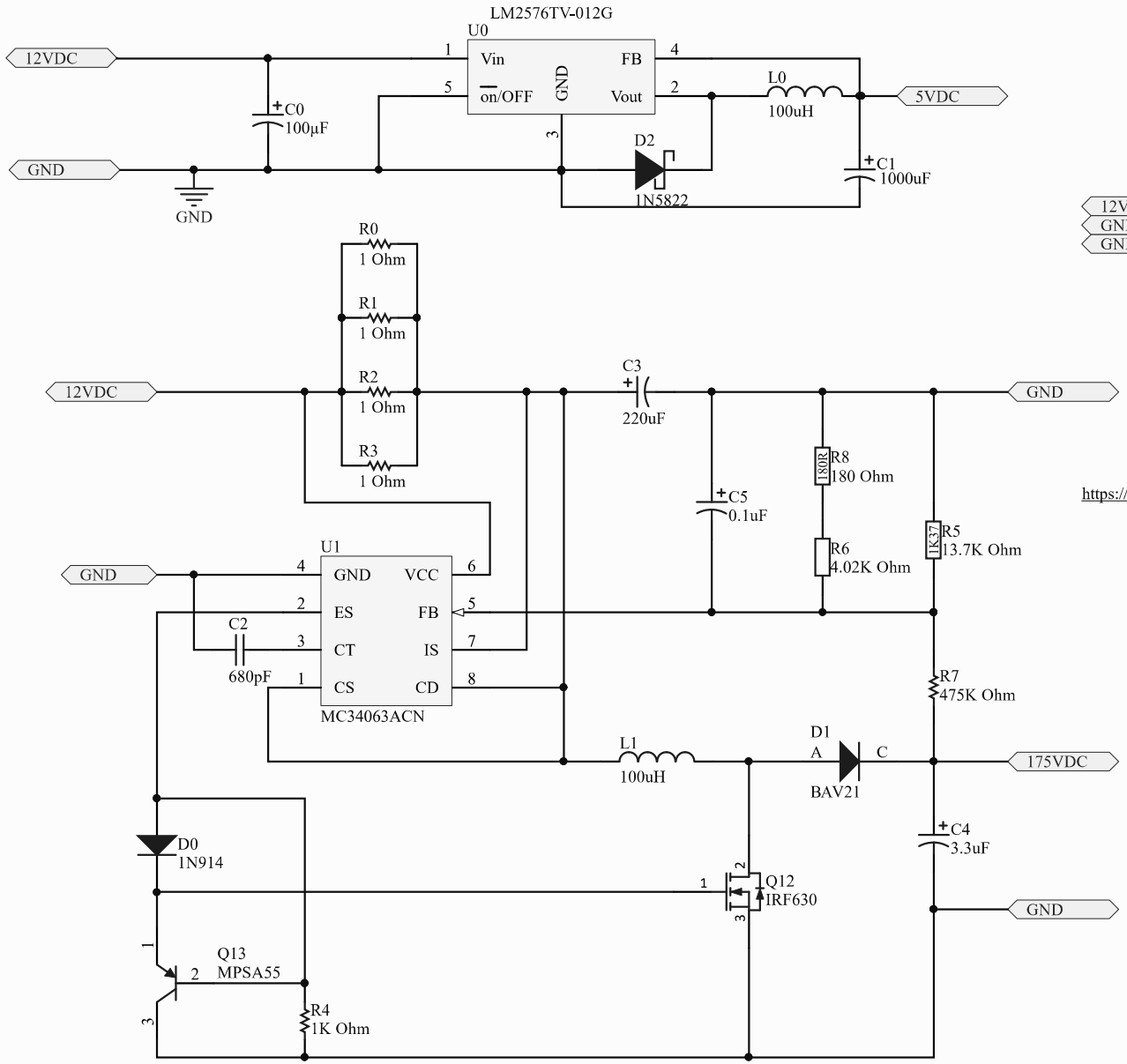

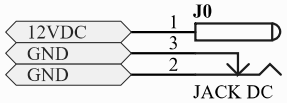

https://threeneurons.wordpress.com/nixie-power-supply/hv-supply-kit/

Title		
Size A	Number	Revision
Date: 5/28/2020		Sheet of
File: PowerSupplies.SchDoc		Drawn By: