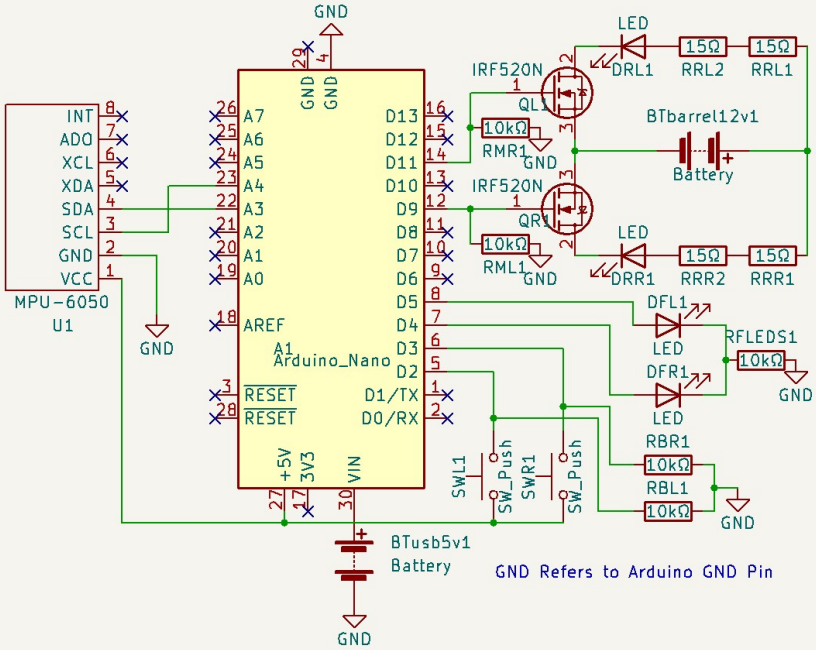

Sheet: /
File: completeSchematic.kicad_sch

Title: Bike Project Complete Schematic

Size: A5	Date: March 4, 2022	Rev:
KiCad E.D.A. kicad (6.0.1)		Id: 1/1